DOUGLAS
BRISTOL

Vespa

42.L.2 (125 c.c.)
92.L.2 (125 c.c.)
102.L.2 (150 c.c.)

OPERATION AND MAINTENANCE MANUAL

DOUGLAS
BRISTOL

Vespa

42.L.2 (125 c.c.)
92.L.2 (125 c.c.)
102.L.2 (150 c.c.)

OPERATION AND MAINTENANCE MANUAL

BE VESPA-WISE

In accordance with the Douglas policy of progressive improvement the right is reserved to alter any details of price, specification, accessories, and equipment, without notice, and without incurring any obligation.

To keep your Vespa in perfect running order, it is advisable to entrust repairs only to authorised Douglas Dealers. We point out that the use of parts other than original "Douglas" Spares will invalidate your Guarantee.

Special care should be taken to ensure that the oil/petrol ratio is always in strict accordance with our recommendations.

DOUGLAS (SALES & SERVICE) LTD., KINGSWOOD, BRISTOL.
Telephone **67-1881**
DIVISION OF THE WESTINGHOUSE BRAKE & SIGNAL Co. Ltd.

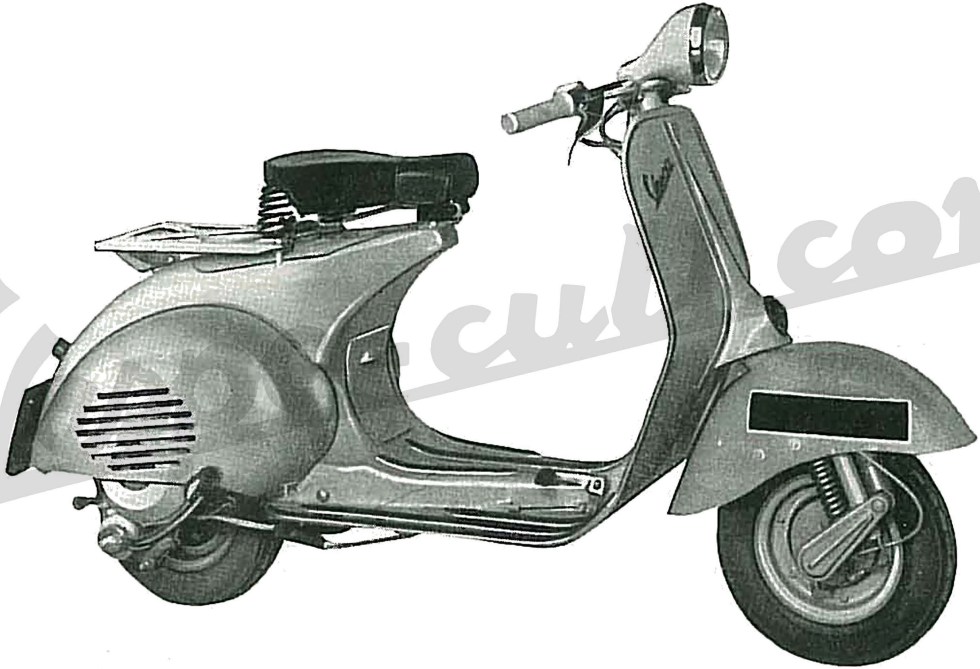

FIG. 1

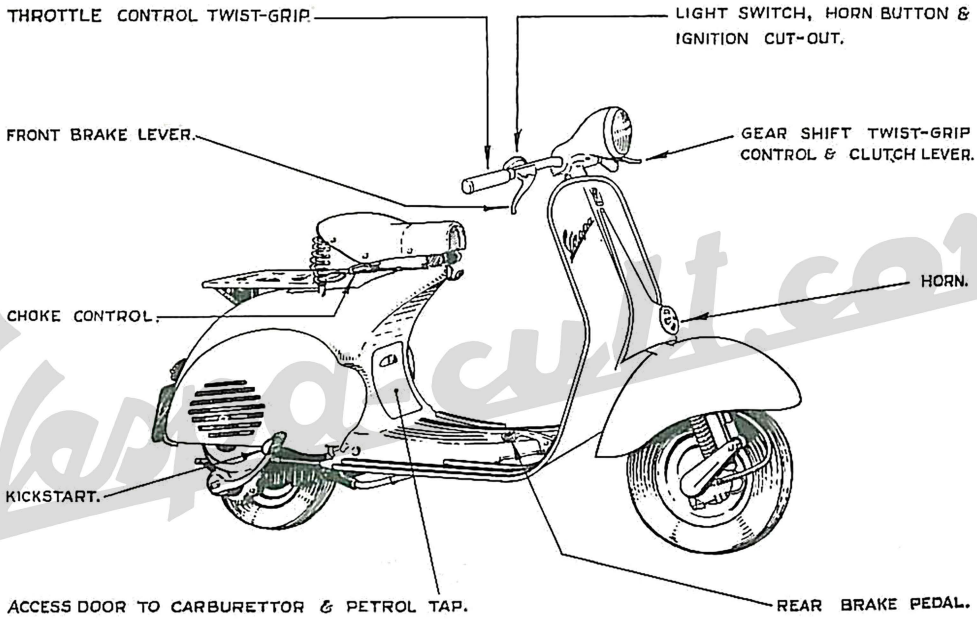

Fig, 2.

VESPA CONTROLS

MAIN SPECIFICATION—125 c.c. MODEL

Frame: Of pressed and spot-welded steel sheet, with stream-lined monocoque type construction.

Suspension: With variable rate coil spring and double action hydraulic damper on both wheels.

Engine: Two-stroke, with reverse flow scavenge. Cast iron cylinder and cast aluminium alloy cylinder head.

Bore	54	mm. (2.126 in.)
Stroke	54	mm. (2.126 in.)
Displacement	123.67	cc. (7.48 cu. in.)
Max brake power	5	HP
Compression ratio	6.5 to 1	

MAIN SPECIFICATION—150 c.c. MODEL

Engine:

Bore	57	mm. (2.244 ins.)
Stroke	57	mm. (2.244 ins.)
Displacement	145.6	c.c. (8.88 cu. in.)
Max. brake power	5.5	at 5000 R.P.M.
Compression ratio	6.1/6.5 to 1	

Transmission: Direct from engine to rear wheel through clutch, cush drive and gear box.

Starting: By means of footstarter, right hand side of scooter.

Gear box: 3-speed drive with constant mesh gears in oil bath. Its adjustable two-cable control is coupled with that of the clutch, on left hand side of handlebars.

Clutch: Wet type, steel plates with cork inserts.

Ignition: By 6-pole flywheel magneto.

Lighting and horn: By flywheel magneto, with a.c. feeding head lamp, tail lamp and horn.

Brakes: Expanding type.
Front brake: control lever on right hand side of handlebars.
Rear brake: control pedal on right hand side of chassis.

Wheels: Of pressed steel sheet, interchangeable and easily removable, following normal car practice.
Tyres: 3.50″ × 8″, Michelin.

Fuel Tank: Fitted with three-way Tap Open-Closed—Reserve. The Tap includes a Filter.

Wheel Base	1180 mm.	46.5 in.
Max width of Handlebars	792 mm.	31.1 in.
Max. length of Scooter	1718 mm.	67.5 in.
Max Height	1029 mm.	40.5 in.
Height of Saddle	790 mm.	31 in.
Ground Clearance	102 mm.	4 in.
Minimum Turning Circle	1500 mm.	59 in.
Weight—Dry	86 Kgs.	190 lbs. (approx)

Centre stand. A two-leg stand is fitted under the chassis. Two strong return springs hold it in contact with the chassis and keep it from vibrating while the scooter is being ridden.

Tool Kit

2 Double ended Box Spanners, 11—14 mm. and 21—22 mm.

1 Tommy Bar

4 Double Ended Flat Spanners, 8—10 mm. 7—8 mm. 11—14 mm. $\frac{1}{4}'' \times \frac{5}{16}''$ Whit.

1 Screwdriver

Contained in a Roll and housed in nearside wing.

Speedometer. The speedometer is housed in the upper half of the handlebars support, and enhances the appearance of the scooter. It is driven by the front wheel, the flexible shaft being completely enclosed in the steering column.

Routine maintenance can be quite well carried out by any owner, even inexperienced, by carefully following some general rules.

OPERATION

Fuel Supply: Fuel mixture should be composed of Petrol and Grade SAE.30 Oil in the following proportions:—

5% or ½ Pint of Oil to 1¼ Gallons of Petrol during and after running in.

Keep the Breather Hole in the Filler Cap clear.

Starting the Engine: Switch on Fuel, put the Gearbox in Neutral and the Throttle in the slow running position, depress the footstarter. If the engine does not readily start make sure that the carburretor is not flooding.

Setting the machine in motion. Let the engine idle, depress the clutch and turn the gear change twistgrip so that the line engraved on it coincides with the figure 1 (1st gear) engraved on handlebars (see Fig. 5). Now let in the clutch gently, whilst opening the throttle gradually to set the machine in motion.

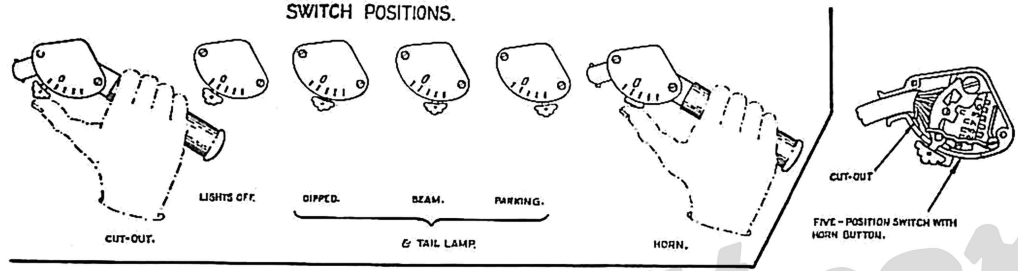

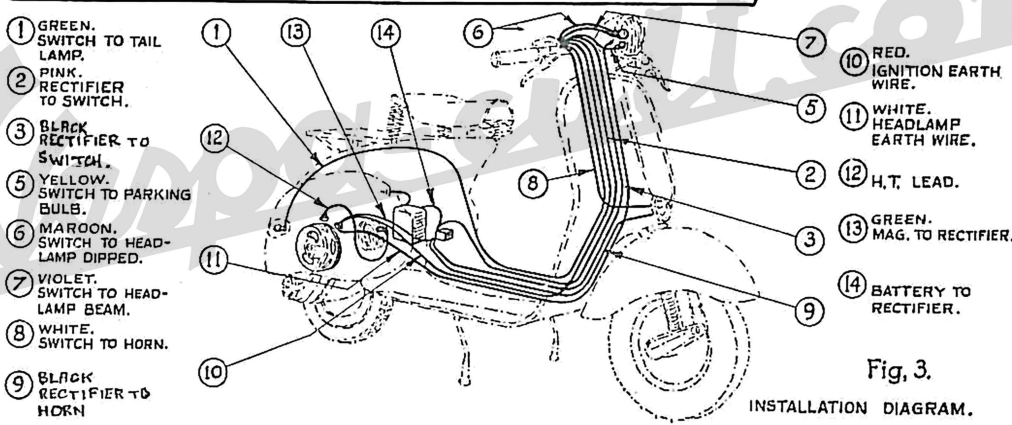

Fig, 3.

INSTALLATION DIAGRAM.

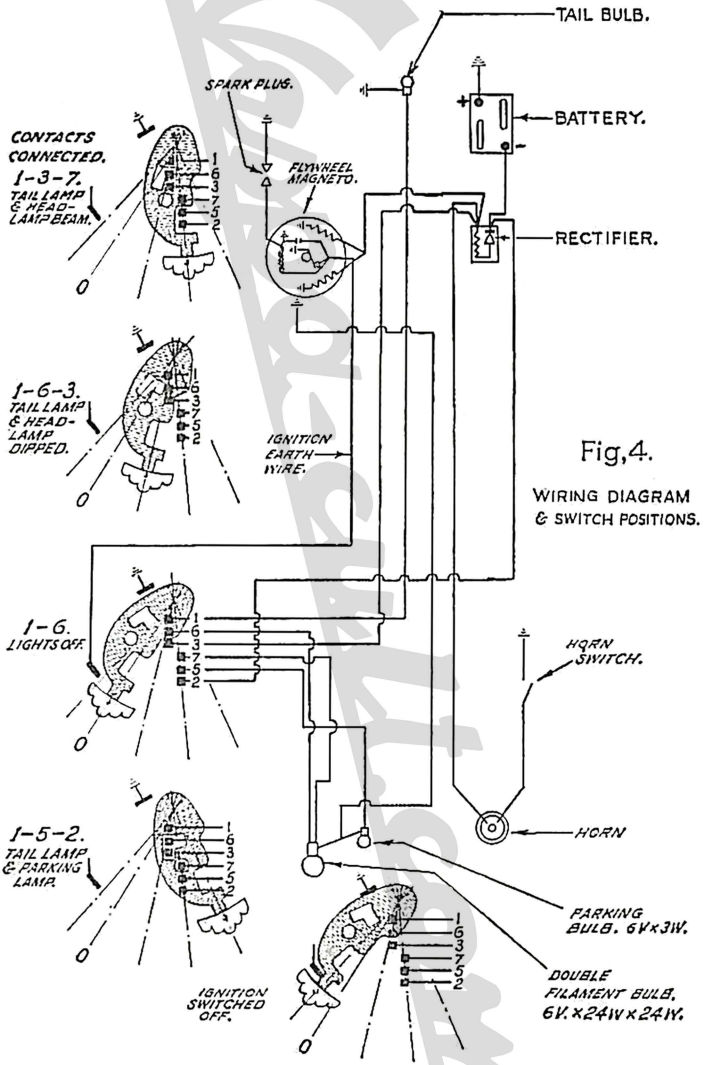

Fig,4.

WIRING DIAGRAM & SWITCH POSITIONS.

Gear Change. After reaching the required speed in 1st gear, quickly close the throttle, depress the clutch and turn the gear change twistgrip so that the engraved line is opposite figure 2 (2nd gear), let in the clutch and open the throttle gradually.

Repeat this procedure for changing into 3rd gear.

For changing down, close the throttle, depress the clutch and turn the gear change twistgrip to the required position.

After a little practice, you will find that gears can be changed without using the clutch lever at all, this will not damage the gear box (see the drive system on Fig. 6).

Never let your engine labour when you are forced to reduce speed. Engage the next lower gear without delay.

Do not turn the gear change twistgrip while the engine is not running.

Should gear change troubles arise, particularly if the control becomes stiff, owners should have their machines adjusted by a Service agent or authorised service station.

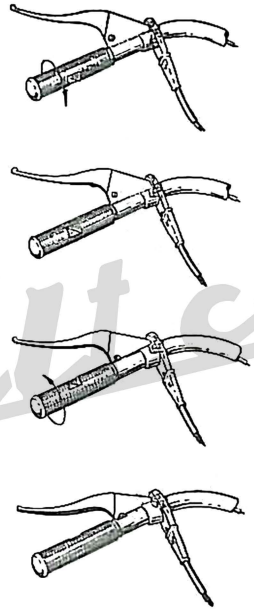

Fig. 5. GEAR CHANGE.

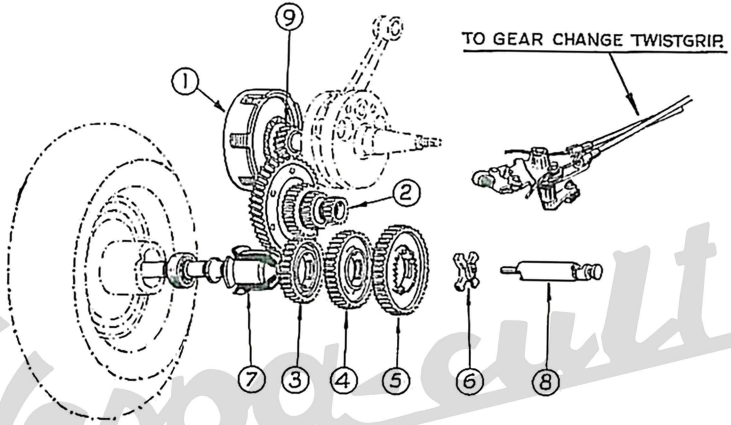

Fig. 6.

1. CLUTCH.
2. CUSH GEAR.
3. 3RD GEAR PINION.
4. 2ND GEAR PINION.
5. 1ST GEAR PINION.
6. SELECTOR.
7. GEAR SHAFT.
8. SELECTOR STEM.
9. CLUTCH PINION.

Tyres. The wheels are interchangeable, provided, of course, that they are inflated to the pressures respectively prescribed (see page 15).

When a flat tyre is to be replaced, unscrew the four nuts which secure the wheel to the brake drum, pull the wheel sideways off the studs, repair it or fit the spare wheel (see fig. 7).

Dunlop Tyres, Pressure to be:

Front	16	Solo
Rear	20	Solo
Front	16	Pillion
Rear	32	Pillion
Front	16	Sidecar
Rear	24	Sidecar
Sidecar	16	Sidecar

Pirelli Tyres, Pressures to be:

Front	16	Solo
Rear	22	Solo
Front	16	Pillion
Rear	32	Pillion
Front	18	Sidecar
Rear	24	Sidecar
Sidecar	16	Sidecar

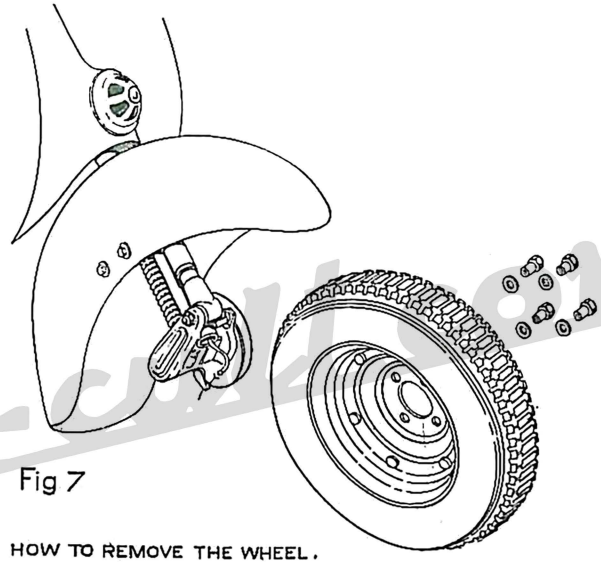

Fig 7

HOW TO REMOVE THE WHEEL.

For removing the inner tube, let the air out first, then unscrew the six nuts on the wheel, so that the two halves of the rim fall apart (see fig. 8).

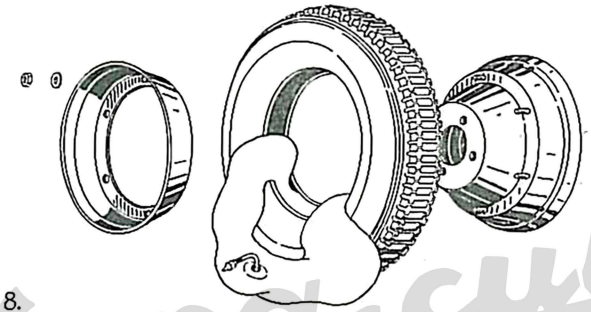

Fig, 8.

HOW TO REMOVE OUTER COVER & INNER TUBE.

Stopping the engine. Push the switch lever to the left. This will leave the cylinder full of fuel vapour, and the next start will be much easier.

Brake adjustment. Brakes are properly adjusted if:—the wheels rotate freely when the control lever and pedal are in rest position, provided the braking action starts as soon as the controls are operated.

These conditions are achieved by adjusting the cables by means of screws indicated with an arrow in Figs. 9 and 10.

Slow running adjustment. No tool is required for this job; idling revs. can be raised by simply tightening the screw which presses on carburettor cover and vice-versa.

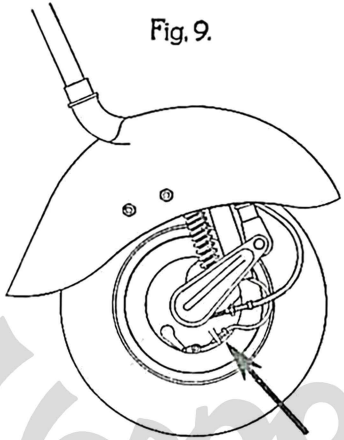

Fig. 9.

FRONT BRAKE ADJUSTMENT

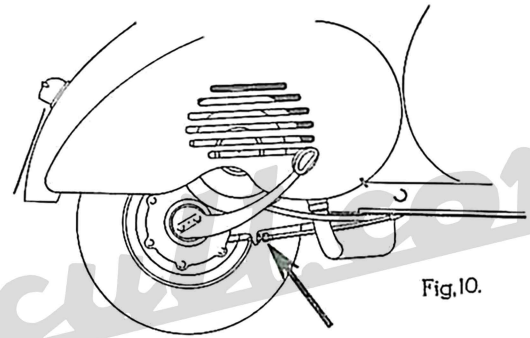

Fig. 10.

REAR BRAKE ADJUSTMENT

Important rules to be followed while running in (1,250 miles)

1. **Do not exceed the following speeds:** **In 1st Gear 10 m.p.h.**
   In 2nd Gear 20 m.p.h.
   In 3rd Gear 30 m.p.h.

2. **Never let your engine labour. If you are forced to reduce speed engage the next lower gear without hesitation.**

MAINTENANCE

Cleaning the scooter. Brushing with paraffin and wiping dry with clean rags is advisable for outside cleaning of engine.

All painted surfaces should be washed with water, cleaned by means of a sponge and wiped dry with chamois leather. Do not use paraffin on such surfaces, since it damages paint and turns it dull.

Before setting the machine in motion, check oil level in gear box by unscrewing on the crankcase the level screw marked " Oil ."

When the scooter is upright, oil should just be about to flow out.

After the first 600 miles. Replace oil in the gear box by the procedure as explained in the lubrication chart, page 23. The crankcase can be drained through drain hole.

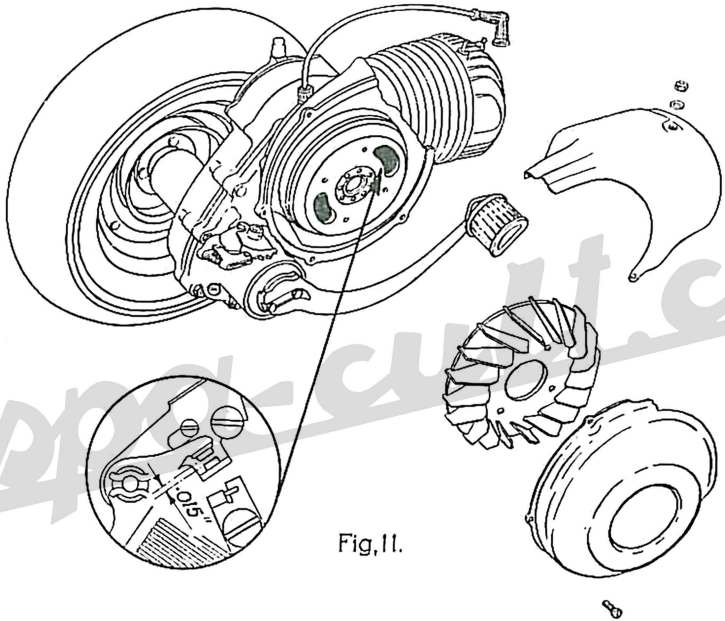

Fig,11.

Every 1,250 miles. 1. Remove the air cleaner from the carburettor and agitate it in a 30% oil-petrol bath.

2. Check oil level in the gear box (see page 24).

3. Clean the Sparking Electrodes with very fine Emery or suitable files and adjust the Gap to ·023/·026″ for K.L.G. F.70; ·022/·026″ for Lodge H.N.; ·020″ for Champion L.86.

Inspect the insulation material of sparkplug; replace the latter if the porcelain is cracked. Wash with neat petrol.

Use the sparkingplug type prescribed by the Company. We remind owners that the use of an approved sparkingplug will prevent many engine troubles.

4. Clean the two lubricators of front wheel hub and refill them by means of a grease gun. Lubricate the speedometer drive pinion and cable, if necessary.

N.B. All operations indicated hereunder should be carried out by authorised Service Stations.

5. Clean and adjust the contact breaker points of the flywheel magneto (see Fig. 11), to .4 mm. gap (.015 in.).

6. Clean the silencer and decarbonise the engine as explained in Fig. 12 and following notes.

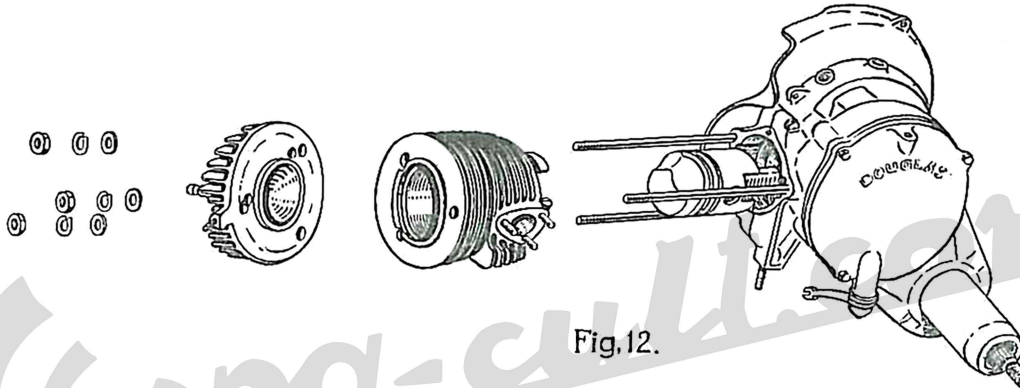

Fig. 12.

HEAD, CYLINDER AND PISTONS

Remove the silencer, the cooling hood and the cylinder head (see Fig. 12). Bring the piston to the top dead centre to decarbonise its crown, and clean all carbon deposits from the mouth of the cylinder; then bring the piston to the bottom dead centre and clean the cylinder ports. Decarbonise the inner side of the cylinder head, ensure that the cylinder barrel is free of all carbon.

Heat and clean the exhaust pipe of the silencer, either by scraping it internally with a hooked wire or blowing air through from the opposite end; in both cases the silencer should be held so that the exhaust pipe is turned downwards.

Every 1,800 miles. Grease the felt which lubricates the cam of flywheel magneto. In case of damper troubles, contact your authorised service stations.

Laying up. Clean the Vespa thoroughly. Drop some mineral oil into the engine through the sparkplug hole, and turn the engine over a few times to ensure that a thin oil film spreads all over the internal surfaces to prevent rusting. Support the chassis of the machine on two wooden blocks, ensuring that the tyres are clear of the ground.

N.B. Lubricate exclusively with oil and grease as indicated on lubrication chart, page 23.

LUBRICATION CHART

Part to be lubricated		Lubrication				
Every 2,500	Every 5,000	*Shell	*B.P.	Esso	Wakefield	Mobil
Gear-box topping-up	Gear-box change oil	Shell 2T Two-Stroke Oil or Shell X-100 30	Energol Two-Stroke Oil or Energol SAE. 30	Esso Extra Motor Oil 20W/30	Castrol XL	Mobiloil A
Front suspension Felt pad on fly-wheel cam Joints on brake control Speedo flexible drive	Control cables Gear change quadrant	Retinax A	Energrease L.2	Esso Multi-Purpose Grease H	Castrolease L.M.	Mobilgrease M.P.
Engine at each re-fuelling		Shell 2T Two-Stroke Oil in ratio of 5% or ½-pint to 1¼ galls. petrol	Energol Two-Stoke Oil in ratio of 5% or ½-pint to 1¼ galls. petrol	Essolube 30 in ratio of 5% or ½-pint to 1¼ galls. petrol. Esso Two-Stroke Motor Oil in ratio of ¾-pint to 1¼ galls. galls. petrol	Castrol XL in ratio of 5% or ½-pint to 1¼ galls. petrol Castrol Two-Stroke Oil in ratio of ¾-pint to 1¼ galls. petrol	Mobiloil A in ratio of 5% or ½-pint to 1¼ galls. petrol or Mobile Mix in ratio of ¾-pint to 1¼ galls. petrol

*Marketed also by National Benzole Co. Ltd., by arrangement with Shell-Mex & B.P. Ltd.

APPROVED PETROL/OIL MIXTURE

Make	Description
Shell	2T Two-Stroke Mixture
B.P.	B.P.-Zoom
National Benzole Co. Ltd.	Hi-Fli

Hydraulic Dampers	When not working efficiently consult your Dealer. If servicing is required, they should always be returned to the Works

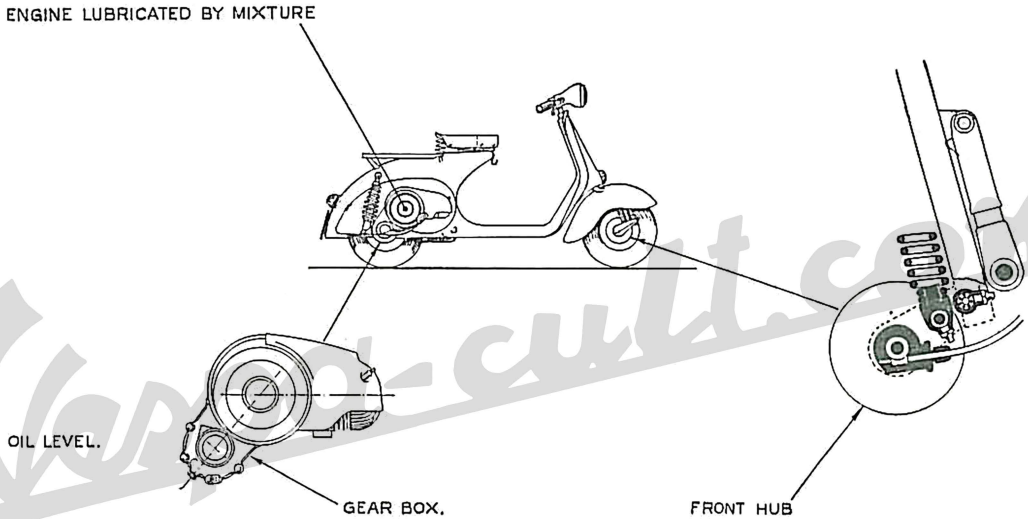

LUBRICATION SCHEME. FIG. 13

FAULT FINDING

When the engine does not run properly, make all inspections and rectifications as explained below.

If the suggested remedies do not eliminate the trouble, contact your local dealer.

Locating the trouble	Remedies	Remarks
HARD STARTING		
1. Fuel System		
Fuel tank empty	Turn to " reserve." Refill as soon as possible	
Fuel does not flow to the carburettor although the fuel tap is open or in position " reserve "	(*a*) Depress the tickler until some fuel drips out, or (*b*) Unscrew and remove the main jet. If the fuel system is efficient, fuel will come out. (*c*) Blow through jet orifice to ensure that it is clear	
Filter on Fuel Tap Filter on carburettor Carburettor body Main jet and atomizer } Clogged, dirty	Remove and wash in petrol. Blow dry	
Float needle valve sticking on its seating	Release by depressing the tickler	
2. Carburation		
Engine flooding	See page 10	
Tickler sticking in depressed position	Release	

Locating the trouble	Remedies	Remarks
Float perforated	Replace	
Air cleaner choked or dirty	See page 20	
Choke flap sticking in position " closed "	Release	
Carburettor assembly mounted at an angle	Turn to vertical position	
3. Ignition	Disconnect the plug lead. Check if sparking occurs between lead and crankcase when the footstarter is operated	
Sparking plug dirty	Clean—correct Gap according to Maker's recommendations. See page 20	
Porcelain of sparking plug cracked	Replace the plug	
Switch lever jammed in " cut out " position	Release the lever	
Breaker points dirty, partially worn or pitted	Clean with suitable files or very fine emery paper*	
Gap between breaker points incorrect	Correct to .4 mm. with feeler gauge (.015")*	
Breaker points completely worn or pitted	Replace*	*To be carried out by a Service agent
Timing wrong	Re-time ignition*	
Pick-up terminal cracked	Replace	
INCORRECT RUNNING		
1. Lack of power		
Silencer outlet pipe carbonised	Clean	
Induction pipe to cylinder loose	Replace the joint washer between pipe and cylinder. Tighten the nuts on cylinder studs	
Exhaust port partially closed by carbon deposit	Decarbonise cylinder, piston and cylinder head*	
Cylinder base gasket not tight	Replace*	
2. Poor compression		
Sparking plug not fully screwed in cylinder head	Tighten	

Locating the trouble	Remedies	Remarks
Cylinder head not fitting properly into the spigot on top of cylinder	Set the head properly and tighten the nuts	
Head gasket not tight	Replace	
Piston rings gummed up	Clean the rings and grooves*	*To be carried out by a Service agent
3. Explosion at silencer or carburettor		
Sparking plug carbon-coated or with excessive electrode gap	Replace or clean the Plug, correcting the Gap to Maker's specification. See page 20**	
Carbon pearls on sparkingplug insulation	Clean	
Pre-ignition	(*a*) Check sparkingplug (*b*) Re-time the ignition*	
Condenser loose in its housing	Tighten the screw holding the condenser*	
Tip of contact breaker loose	Replace the breaker*	
Not enough mixture flowing to the carburettor	See paragraph "Hard starting," No. 1	
4. Clutch troubles		** Use suitable wire brush or emery paper
(*a*) Clutch snatches		
Outer convex plate wrongly assembled	Turn convex face towards cork-insert plate*	
Gear pinions not lubricated properly	Top up oil level and see that the screw on draining hole is tightened (see page 24 and Fig. 13)	
(*b*) Clutch slips		
Springs feeble	Replace*	
Plates with cork-inserts worn or burnt	Replace both plates and springs*	
(*c*) Clutch does not disengage completely		
Excessive play on control cable	Adjust*	
Excessive convexity of outer steel plate	Replace*	

Locating the trouble	Remedies	Remarks
5. Slipping out of gear		
Gear change control cables out of adjustment	Adjust*	
Gear shifter loose on crankcase	Tighten the screws	
Spring of stirrup broken, feeble or missing	Replace with new assembly	
Excessive play between actuating arm and gear shift flange	Replace*	
Selector arms chamfered	Replace the selector*	
Dogs of gear pinions chipped or worn	Replace the pinions*	
6. Starter assembly not engaging	Contact your Service agent	
7. High fuel consumption		
I. Fuel level too high in carburettor		
(*a*) Tickler sticking in depressed position	Release	
(*b*) Float perforated	Replace	
(*c*) Float needle valve not properly fitting into its seating	Clean or replace both needle and float chamber cover	
II. Air cleaner choked or dirty	Clean with pure petrol and blow dry. Dip the metal wadding into a 30% petrol-oil bath	*To be carried out by a Service agent
III. Flap of choke valve sticking in closed or partially closed position	Release operating and lubricating the lever on the back of the cleaner case	
IV. Retarded ignition	Re-time*	
V. Poor compression	See No. 2 of this paragraph	
8. Controls not operating properly		
Inner cables rusted	Lubricate or, if necessary, replace*	
Excessive play	Adjust*	

Locating the trouble	Remedies	Remarks
9. Steering becomes stiff	Slacken top race of top ball bearing* Replace bottom race of each bearing*	
10. Excessive play in steering Top race of top bearing loose	Tighten*	*To be carried out by a Service agent
11. Poor braking Stroke of pedal or lever too long Brake linings oily or worn down Brake drums and linings scored	Adjust (See Fig. 9, page 17) Wash with petrol and dry in air, or replace. Ask the Service agent about oil leakage Replace	
12. Inefficiency of suspension Noisy Inefficiency Difficult rotation of wheel spindle	Contact your Service agent	
13. Engine noisy	Contact your Service agent	
14. Faulty electric wiring Lead terminals loose or wrongly connected on L.T. socket, pick-up terminal or switch	Re-connect properly or replace and tighten the screws. Ask the Service agent, if the trouble is not eliminated by this procedure.	

N.B. Owners—it is advisable to carry a spare sparking plug, particularly when on a long journey.

VESPA OWNERS—WHEN REFERRING TO THIS PUBLICATION, PLEASE QUOTE THIS CODE:

42.L.2., 92.L.2., 102.L.2./1500/11.61/L.B.545

Printed in England.